Change description	Date	Designed by

MAIN DIMENSIONS

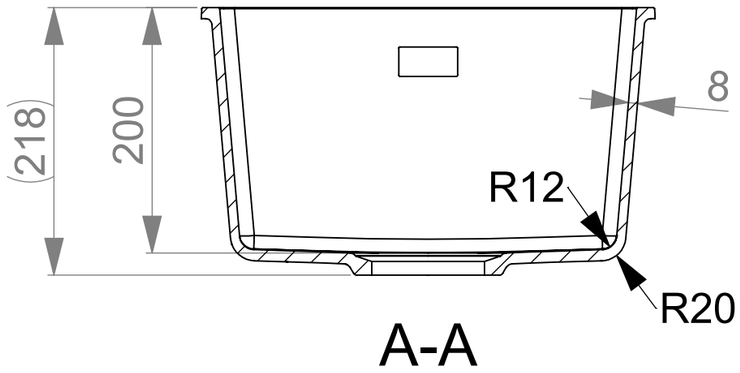

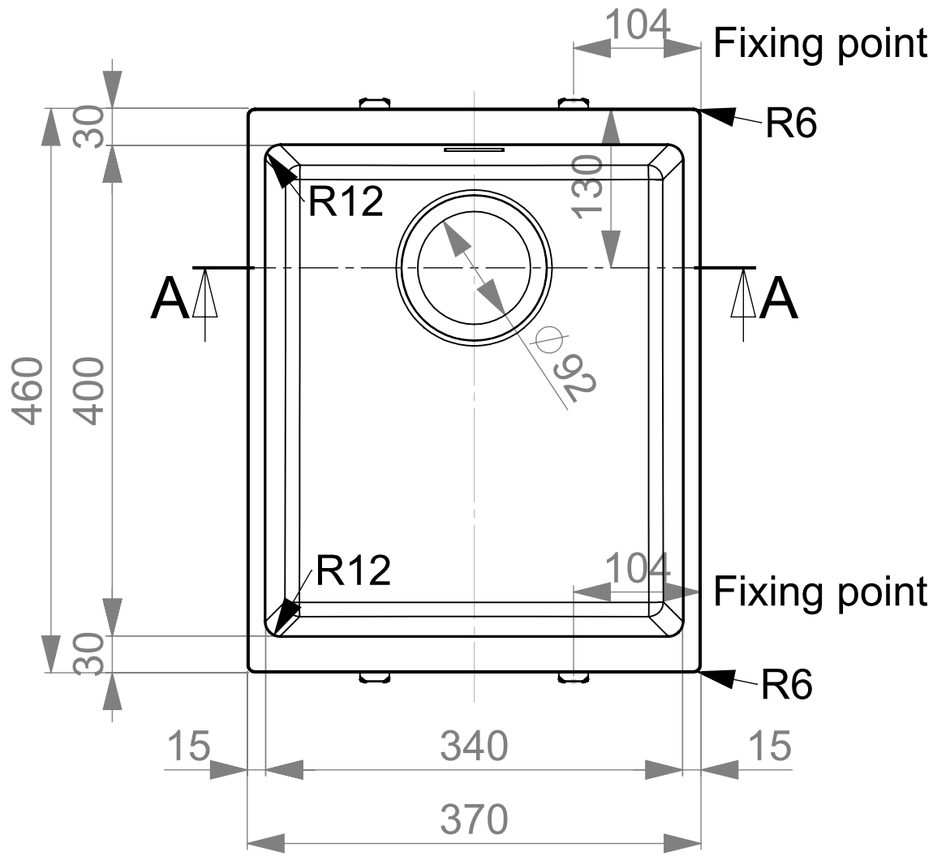

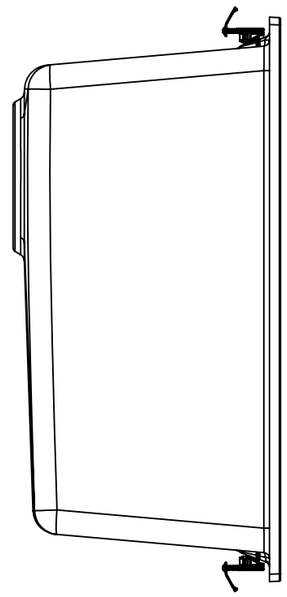

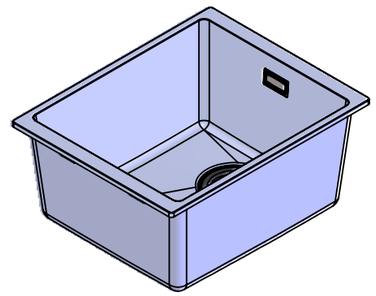

Mass kg		General tolerance	Designed by VS	Date 27.12.2022
Size A3	Scale 1:5	Item	Approved by VS	Date 20.01.2023
STALA Member of ALVEUS		Description CEG-E34 Technical Data Sheet	Drawing number 19572	Sheet/sheets 1/6
				Rev A

Change description	Date	Designed by

WORKTOP ASSEMBLY

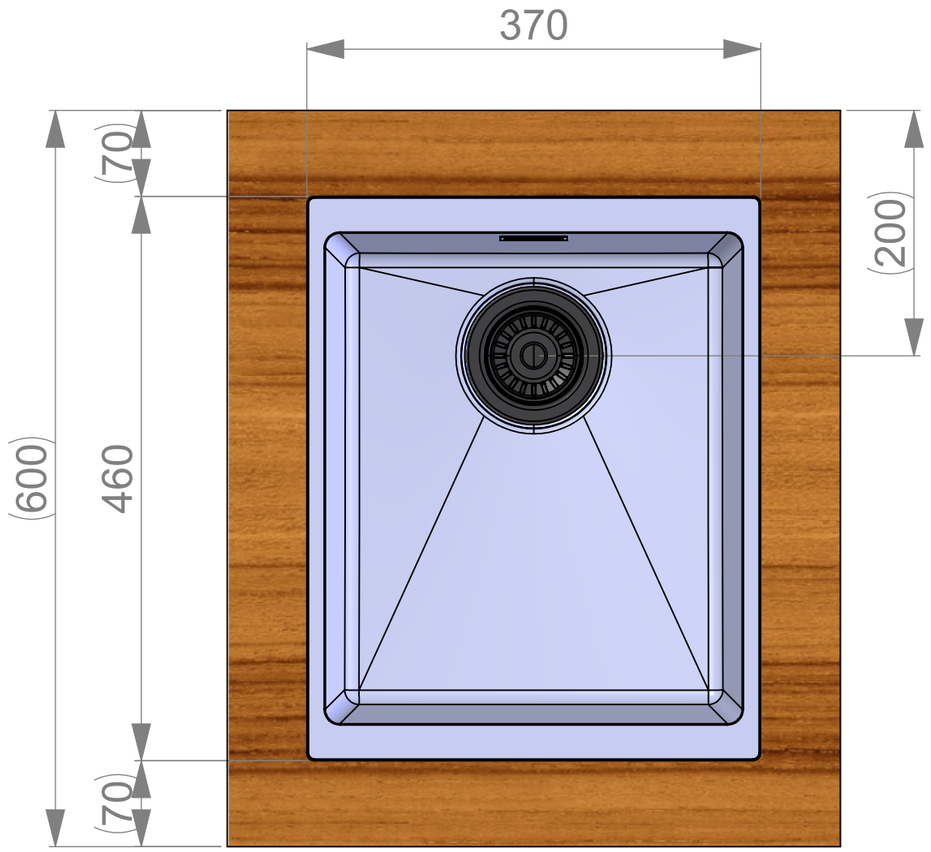

Mass kg		General tolerance	Designed by VS	Date 27.12.2022
Size A3	Scale 1:5	Item	Approved by VS	Date 20.01.2023
STALA Member of ALVEUS		Description CEG-E34 Technical Data Sheet	Drawing number 19572	Sheet/sheets 2/6
				Rev A

Change description	Date	Designed by

SPACE REQUIREMENTS

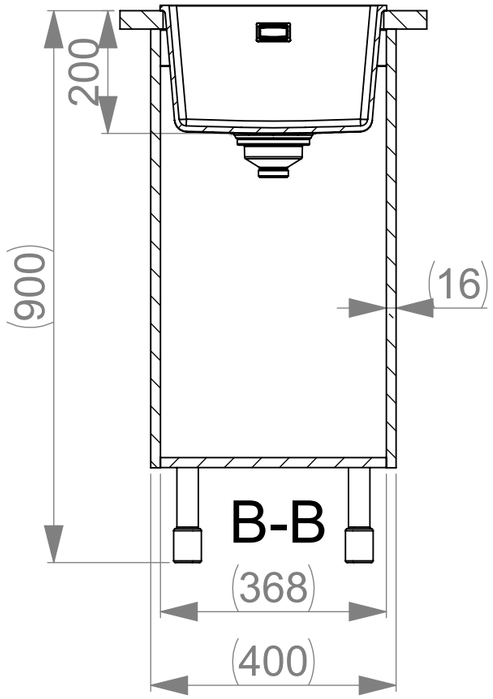

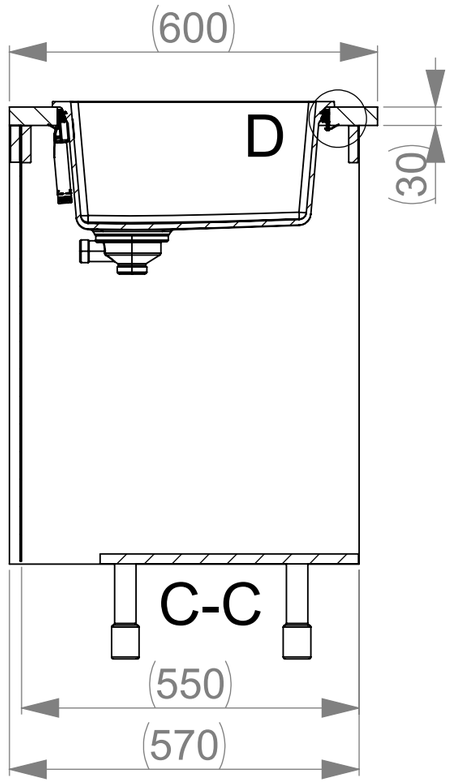

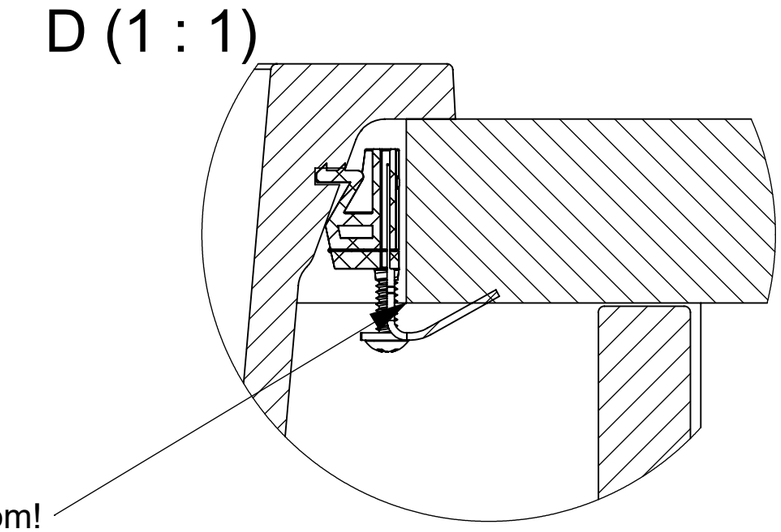

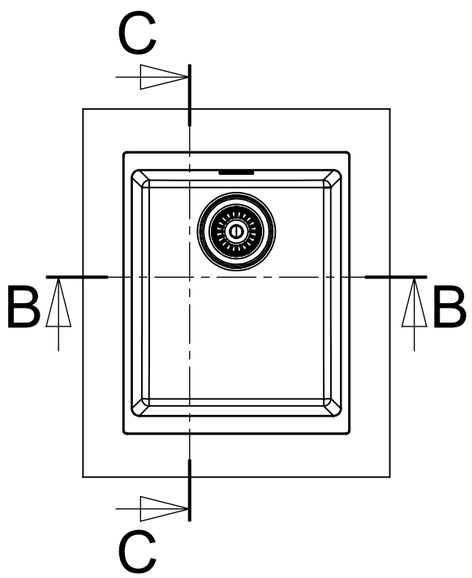

Huom!
Tarvittaessa kaapin väliseinää ja etu/takalistaa lovettava kiinnikkeitä varten ja pesuallas on kiinnitettävä ennen työtason asennusta.
Obs!
Vid behov måste en inskärning för hofästena göras i skåpets mellanvägg och förbindningslist och diskbänken måste fästas innan du monterar bänkskivan.
Notice!
The partition walls and front/back list of the cupboard must be notched for the sink mountings when needed and the sink must be fastened before installing the worktop.

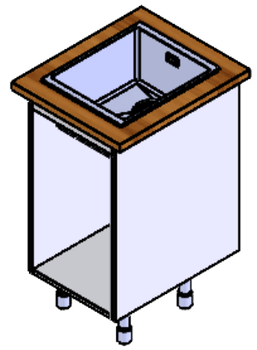

	Mass kg	General tolerance	Designed by VS	Date 27.12.2022
	Size A3 / Scale 1:10	Item	Approved by VS	Date 20.01.2023
STALA Member of ALVEUS		Description CEG-E34 Technical Data Sheet	Drawing number 19572	Sheet/sheets 3/6
				Rev A

Change description	Date	Designed by

CUT-OUT

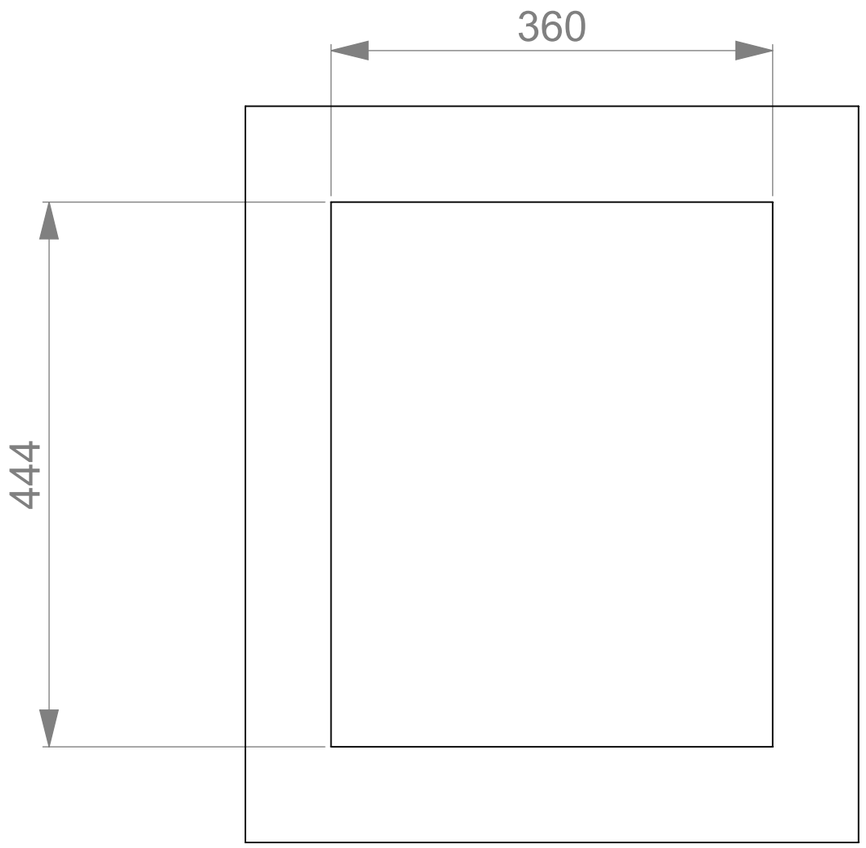
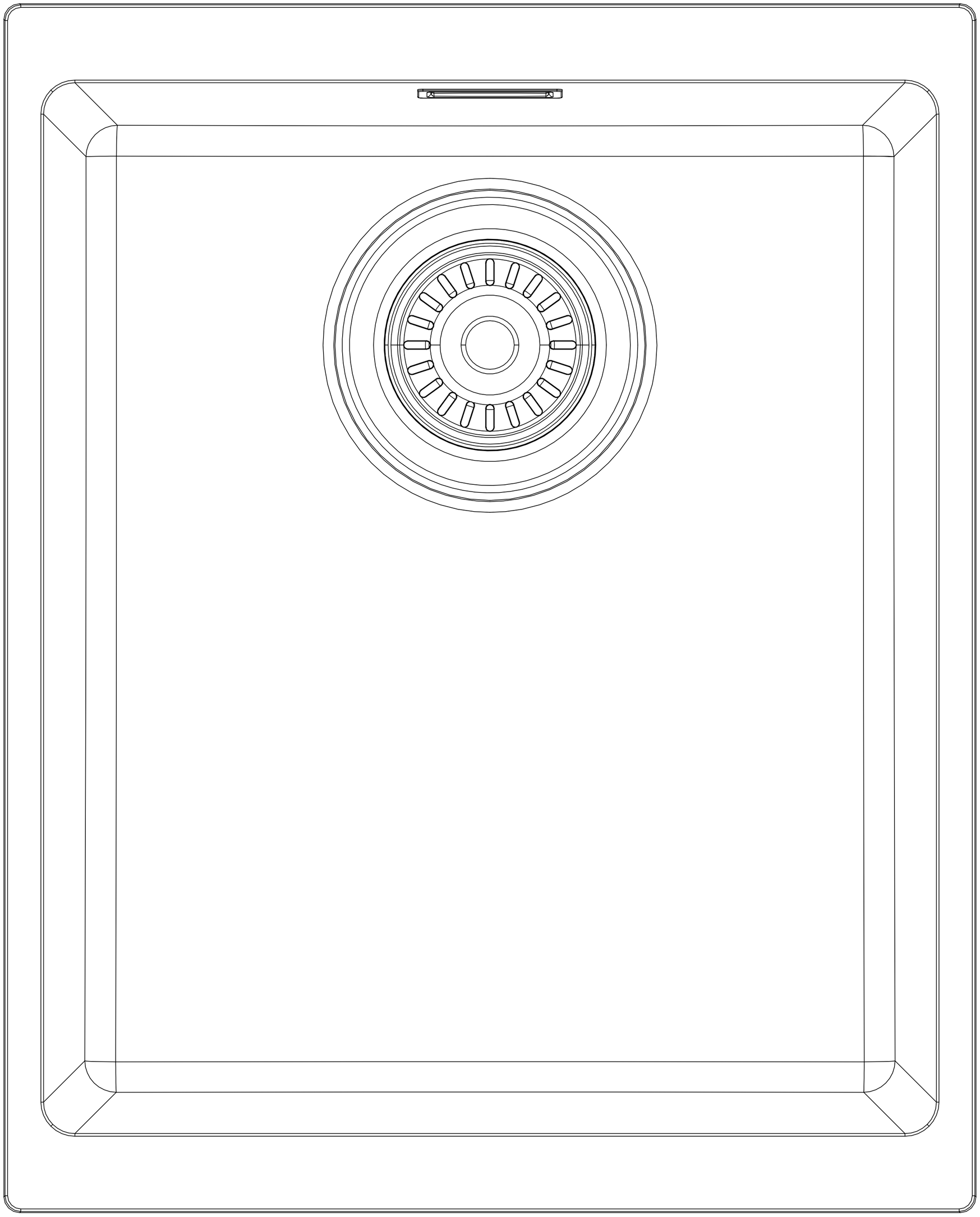
	Mass kg	General tolerance	Designed by VS	Date 27.12.2022
	Size A3 / Scale 1:5	Item	Approved by VS	Date 20.01.2023
STALA Member of ALVEUS		Description CEG-E34 Technical Data Sheet	Drawing number 19572	Sheet/sheets 4/6
				Rev A